Module 4 : Overcurrent Protection

Lecture 15 : Fundamentals of Overcurrent Protection

Objectives

In this lecture we will

- Discuss the fundamental principle of operation of an overcurrent relay.
- Define PSM and TMS of a relay.
- Classify overcurrent relays based on its TCC.
- Discuss backup protection and relay coordination.

15.1 Fundamental Principle of Overcurrent Relay

15.1.1 Limitations of a Fuse

Advantage of fuse based protection is its simplicity and cheapness. However, with fuses it is difficult to control the time to trip. This creates difficulty in primary-backup coordination activity. Also, once a fuse melts, unless it is replaced, the equipment cannot be energized again. Thus, it is not possible to have remote operation. This motivates development of an overcurrent relay.

15.1.2 Model Algorithm for Overcurrent Relay

Whenever, we discuss overcurrent, it should be realized, that there is an implicit upper limit on current which is considered healthy. Typically, this reference is the maximum load current that an equipment can endure during continuous operation. Also, faults (short circuits), lead to overcurrents. Thus, a simple protection philosophy that could be easily implemented by a microcontroller or microprocessor would be as follows:

	Algorithm A : Model Algorithm for Overcurrent Relay
•	Set reference or threshold for discriminating overcurrent $\mathbf{I_{ref}}$.
•	Measure the device current **I**. This may correspond to the rms value of the fundamental component of the current.
•	Compute ratio **abs(I / $\mathbf{I_{ref}}$)**.
•	Since currents are measured through current transformer, both $\mathbf{I_{ref}}$ and **I** should be referred to either primary or secondary of the CT. This ratio **abs(I / $\mathbf{I_{ref}}$)** is called the **P**lug **S**etting **M**ultiplier (**PSM**). The value of PSM indicates the severity of the fault as seen by the relay.
•	Trip the device, if **PSM** is above the threshold. The threshold should be strictly greater than 1, e.g. 1.5.

Usually the rated secondary current is standardized to 5A. Typical, CT rating are 100:5, 500:5, 1000:5 etc. The primary rated current is chosen in such a way that under load conditions CT current is a bit lower than 5A. If the full load current is much below 5A, it indicates under-utilization of CT (Vice-Versa). Because of the above CT ratio selection philosophy, many times we may find I_{ref} to be 5A.

15.1 Fundamental Principle of Overcurrent Relay

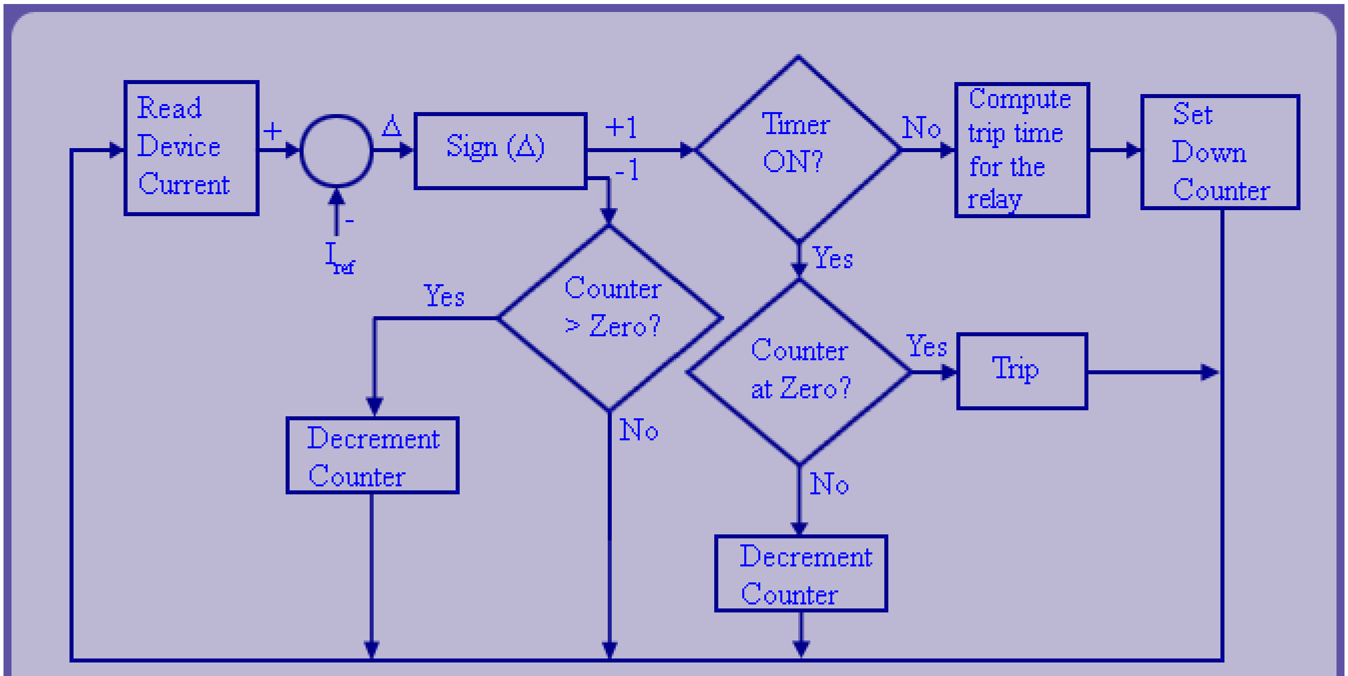

Fig 15.1 Model Algorithm for Overcurrent Relaying

15.1.3Plug Multipier Setting

The principle of overcurrent relaying is as shown in fig 15.1. The first step is to read the device current. Device current is scaled down by a CT and then digitized by an A/D converter. The magnitude of the fundamental component can be estimated from current samples by using various parameter estimation methods. These methods will be discussed in more details in subsequent lectures. In the next step, the input current is compared with the reference current. If sign of Δ is positive, then it indicates possibility of a fault. The ratio I / I_{ref} is also known as Plug Setting Multiplier (PSM).

15.1 Fundamental Principle of Overcurrent Relay

15.1.4Time Multipier Setting

Overcurrent relays have to play dual roles of both primary and backup protection. For example, in a radial distribution system, there may be more feeders downstream. If the downstream fuse or relay R_1or circuit breaker fails to detect the fault and/or isolate the equipment, upstream relays/CBs R_2 have to be opened. (see fig 15.2).

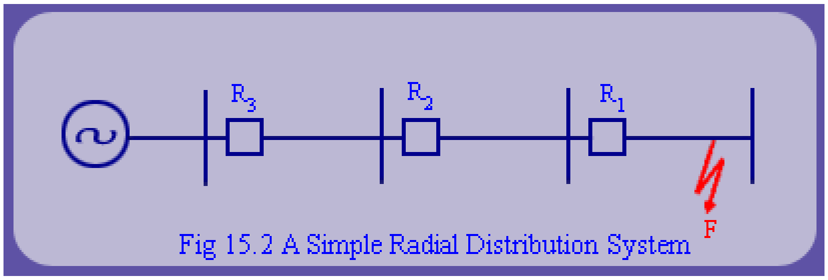

Fig 15.2 A Simple Radial Distribution System

In the previous lecture, we have seen that in a distribution system, the primary protection at lateral point is provided by a fuse. The fuse has inverse time-current characteristics. The back up protection to fuse is provided by overcurrent relays at feeder point. So to replicate fuse behaviour, an overcurrent relay also has an in-built inverse nature.

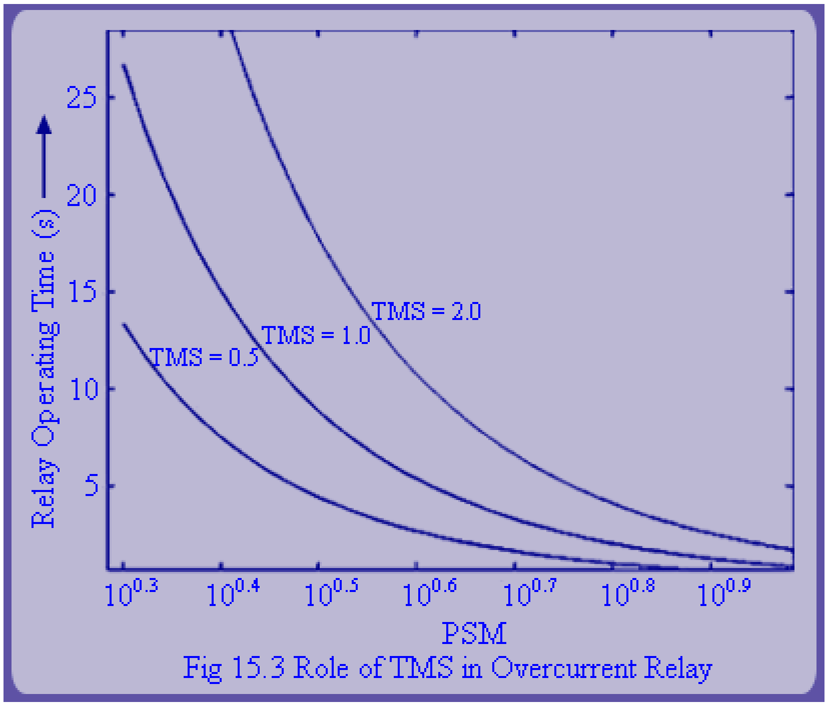

Fig 15.3 Role of TMS in Overcurrent Relay

The upstream relay action (e.g. R_2) should be initiated if and only if downstream relay (e.g. R_1) has failed. Thus, back up action requires a *wait state*. Note that a fuse did not have this flexibility of providing the wait state. For this purpose, in an overcurrent relay, an additional feature of **T**ime **M**ultiplier **S**etting (**TMS**) is provided. The basic idea is that by increasing or decreasing the TMS, the relay operating time can be increased or decreased proportionately.

Fig 15.3 illustrates the characteristics of a overcurrent relay. The characteristic is inverse as in case of a fuse. By increasing or decreasing the TMS, we can move the characteristic up or down. Formally, TMS is defined as the ratio $\frac{T}{Tm}$ where, for a given PSM T is the desired relay operating time and Tm is the corresponding operating time at TMS of 1.0. TMS is also referred to as TDS (Time Dial Setting).

15.1 Fundamental Principle of Overcurrent Relays

15.1.4 Time Multipier Setting

Two fundamental requirements of protection are as follows:

1. Primary protection should be fast.
2. Back up protection should act if and only if primary protection has failed. Hence, it is intentionally slow. This provides selectivity.

For relays which do not have co-ordination responsibility (e.g. relays at the leaf nodes), usually TMS can be set to the minimum. With the knowledge of PSM and TMS, the desired relay operating time is calculated. Consequently, in fig 15.1, which depicts a numerical overcurrent relay, a down counter is initialized. If the overcurrent persists even after the counter reaches zero, a trip decision is issued. If the fault is cleared by some other relay or there is a transient or if fault itself is temporary; then current I may reduce below I_{ref} before the counter resets. Then, the timer is decremented until it reaches zero but no trip decision is issued.

15.2 Types of Overcurrent Relay

Various Time Current Characteristics (TCCs) for overcurrent relay are used in practice. Salient features are described below:

Instantaneous Relay (no intentional time delay) : The operating time of an instantaneous relay is of the order of a few milliseconds. Traditionally, such a relay has only the pick-up setting and it does not have any TMS. As the name indicates, it's action is fast. It is used when it is obvious that large fault currents are the consequence of fault on the equipment being protected by the relay e.g., close-in fault on a long feeder. This relay is not suitable for backup protection.

15.2 Types of Overcurrent Relay

Time delayed Definite Time Relay : A definite time over-current relay can be adjusted to issue a trip output after a specified delay when the relay picks up (PSM>1). This delay is fixed and it is independent of PSM value. Thus, it has a adjustable time setting as well as a pick up adjustment. It is used for short length feeders where the fault current does not change significantly with the location of the fault across the feeder.

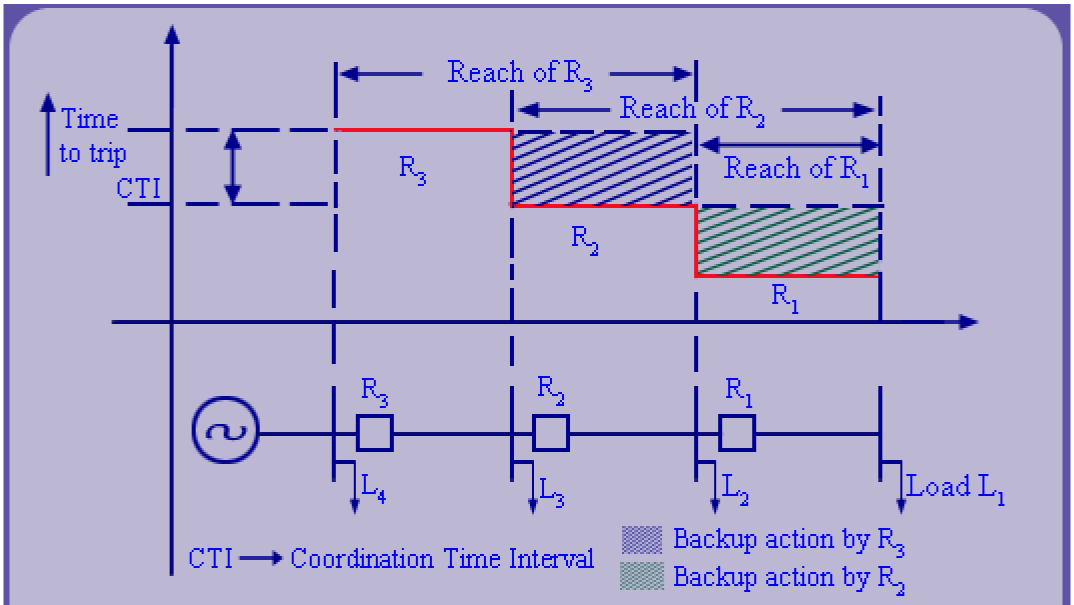

Fig 15.4 Protection of Radial Distribution System with Overcurrent Relay

Fig 15.4 illustrates an overcurrent protection scheme for radial distribution system of fig 15.2, with definite time relays. Relay R_1 does not have any coordination responsibility and hence it can trip without any intentional time delay. Relay R_2 has to coordinate with relay R_1 and hence its time of operation is delayed by time equal to Coordination Time Interval (CTI). Relay R_3 has to back up R_2. Hence its time of operation is delayed by another CTI. Thus, we see that as we move along towards source, the relaying action slows down. Typically, there is an upper limit on any fault clearing time in the system and it equals approximately 1sec. This limit would be hit near the relay close to source.

Example: Consider a CTI of 0.3sec. Then what is the maximum length of a radial system of a feeder that can be protected by overcurrent relay. Assume, that primary protection uses DT relays and primary protection time should not be more than 1sec.

Answer: Let 'n' be the maximum number of feeder sections that can be protected by overcurrent relays and let TOC_{max} be the upper limit on the speed of primary protection. Then $n = \frac{TOC_{max}}{CTI} = \frac{1}{0.3} \approx 3$. Thus overcurrent relays should be used over a limited length in the 3 feeder sections.

15.2 Types of Overcurrent Relay

Inverse definite minimum time (IDMT) Relay : Consider a simple radial system as shown in fig 15.5.

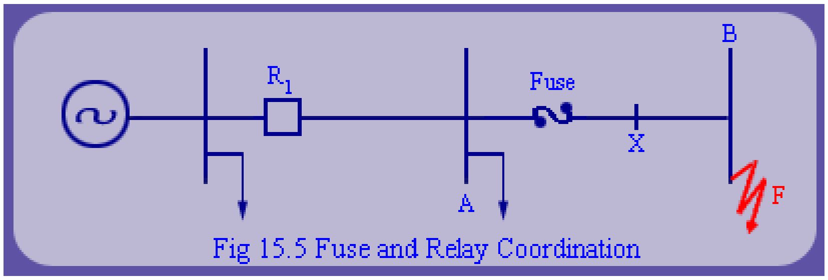

Fig 15.5 Fuse and Relay Coordination

In this case the relay R_1 would have to backup the fuse. Now, if we use a definite time relay to coordinate R_1 with fuse, the coordination. characteristics would appear as shown in fig 15.6.

In this case, it is seen that after point X, the relay acts faster than the fuse for fault in the section XB.

Thus, it is not the fuse but the relay that operates to clear fault in this section. This, unnecessarily leads to lack of service to a load at node A. This lack of coordination is a consequence of the fact that fuse and definite time relay having different characteristics. The problem can be solved if the relay characteristics are also shaped similar to the fuse. It will have the dual advantage of clearing larger fault current quickly and easily coordinating with the fuse. This leads to development of an inverse characteristic for overcurrent relay.

This is probably the most widely used characteristic. It is inverse in the initial part and tends to approach a definite minimum operating time characteristic as the current becomes very high.

Various inverse current operating time characteristics of a relay are shown in fig 15.7. They are normal or standard inverse, very inverse and extremely inverse characteristics.

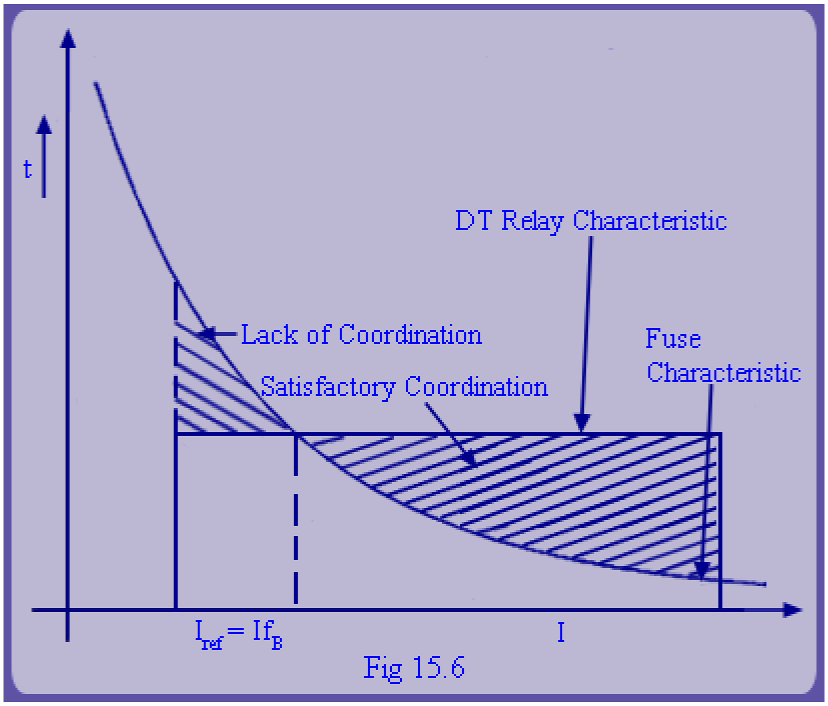

Fig 15.6

15.2 Types of Overcurrent Relays

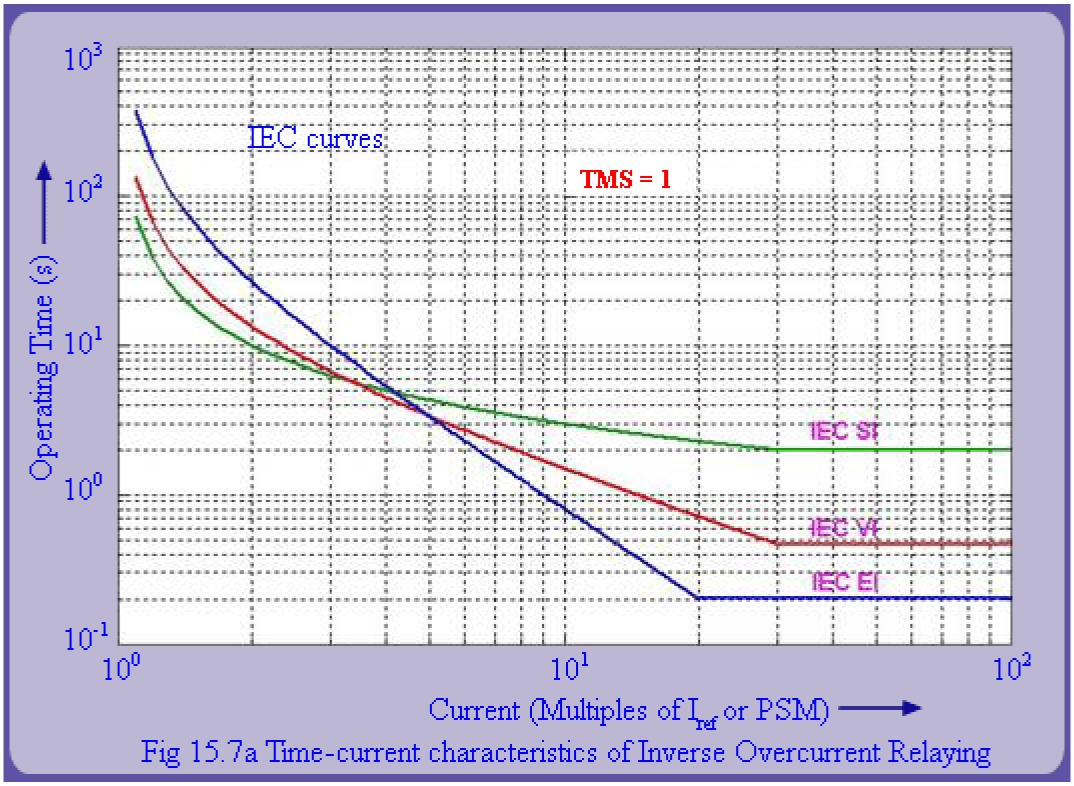

Fig 15.7a Time-current characteristics of Inverse Overcurrent Relaying

Very inverse time

The inverseness of this characteristic is higher than that of the normal inverse characteristic (fig 15.7).

Extremely inverse time

The inverseness of this characteristic is even higher than that of the very inverse characteristic (fig 15.7).

These relays are preferred where less time of operation of relay is required. Table - A summarizes the IEC standard equations governing inverse characteristic. Similar equations are also described by other standards like ANSI/IEEE. Also with many electromechanical relays, the inverse characteristic does not follow any of the standard equations. Then , the manufacturer supplies experimentally determined curves for the specified relay.

Table - A : IEC Inverse Characteristic Equations		
IEC SI (Standard Inverse)	IEC VI (Very Inverse)	IEC EI (Extremely Inverse)
$t = TMS \times \frac{0.14}{(I/Is)^{0.02} - 1}$	$t = TMS \times \frac{13.5}{(I/Is) - 1}$	$t = TMS \times \frac{80}{(I/Is)^{2} - 1}$

As PSM approaches unity, it is clear from above equations that relay operating time increases to infinity. With electromechanical relays, usually manufacturers do not guarantee accuracy of the relay operating time in the PSM range 1 to 1.5. Hence, traditionally PSM of an overcurrent relay is set above 1.5. However, in principle, such restrictions do not apply to numerical relays. Our next task would be to understand the methodology of setting Is and TMS of overcurrent relays. Hence, we now discuss guidelines for setting overcurrent relays. We begin with the classification of the faults.

15.2 Types of Overcurrent Relays

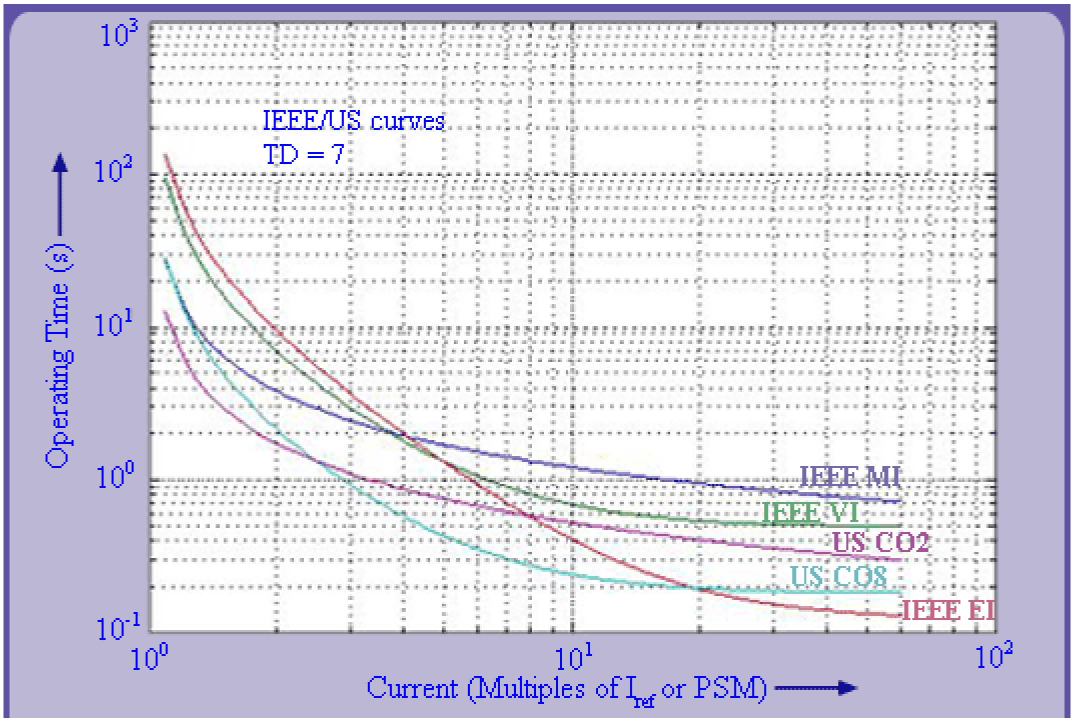

15.7b Time-current characteristics of Inverse Overcurrent Relaying (IEEE/US curves)

Table - A : IEEE Inverse Characteristic Equations (Source : MiCOM P540/ALSTOM)		
IEEE Moderately Inverse	IEEE Very Inverse	IEEE Extremely Inverse
$t = \frac{TD}{7} \times \left\{ \left(\frac{0.0515}{(I/Is)^{0.02} - 1} \right) + 0.114 \right\}$	$t = \frac{TD}{7} \times \left\{ \left(\frac{19.61}{(I/Is)^{2} - 1} \right) + 0.491 \right\}$	$t = \frac{TD}{7} \times \left\{ \left(\frac{28.2}{(I/Is)^{2} - 1} \right) + 0.1217 \right\}$
US CO8 Inverse	US CO2 Short Time Inverse	
$t = \frac{TD}{7} \times \left\{ \left(\frac{5.95}{(I/Is)^{2} - 1} \right) + 0.18 \right\}$	$t = \frac{TD}{7} \times \left\{ \left(\frac{0.02394}{(I/Is)^{0.02} - 1} \right) + 0.01694 \right\}$	Normal range of TD is 0.5 to 15

15.3 Guidelines for Setting pick up current for phase fault protection

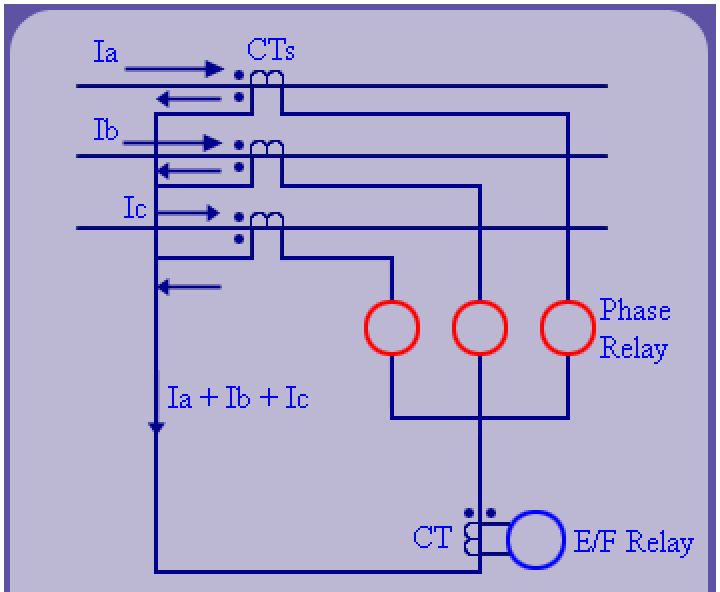

Fig 15.8 Phase Fault and Earth Fault Connection

Faults are classified into two types:

a. Phase Faults: They do not involve ground. e.g. three phase and Line to Line fault.

b. Earth Faults: As the name indicates earth faults involve ground e.g. Single Line to Ground, Double Line to Ground.
   For electromechanical relays we require a separate CT for ground fault detection as shown in fig 15.8. For numerical relays only three CTs and one relay are necessary.
   Guidelines to be followed for phase fault protection are discussed below:

(1) Pickup current should be above maximum load current seen by the feeder. This ensures that relay does not trip on load. Typical norm is to set $I_{ref} > 1.25\ I_{Lmax}$.

(2) Pick up current should be below the minimum fault current i.e; $I_{ref} < If_{min}$. This ensure that protection system operates for low as well as high fault current. During this condition, in the utility least number of generators are in service. Hence, this coordination occurs at light load condition and at the remote end of the feeder.

(3) Pick up current should also be below the minimum fault current of the feeder that it has to backup. Otherwise, a relay's
backup protection responsibility will not be fulfilled.

Remark: If (1), (2) and (3) can not be satisfied simultaneously, then overcurrent relays cannot be used for protection. Alternatives are distance or pilot protection.

(4) For a fault on the feeder being backed up, the relay should provide sufficient time for the corresponding primary relay to
act before it issues tripping command. This interval is called CTI (co-ordination time interval). Typically, CTI is about 0.3 sec. It consists of
CB operating time+ Relay operating time+ Overtravel (time for electromechanical relay) + Factor of safety.
Guidelines for earth fault protection would be discussed in a subsequent lecture.

15.4 Back up protection by time discrimination

We now discuss the problem of relay setting and coordination. Relay setting and coordination involves primarily following steps:

- Identify all possible Primary-Back-up relay pairs.
- Decide the correct sequence for coordination of relays.
- Decide the pickup value and hence PSM for relays.
- Compute the TMS to meet the coordination.
- Validation of the results.

Overcurrent relays are used in distribution systems which are radial in nature (no loops). Thus, they can be modeled by a directed tree having typically one source.

Fig 15.9 shows a coordination tree. Actual

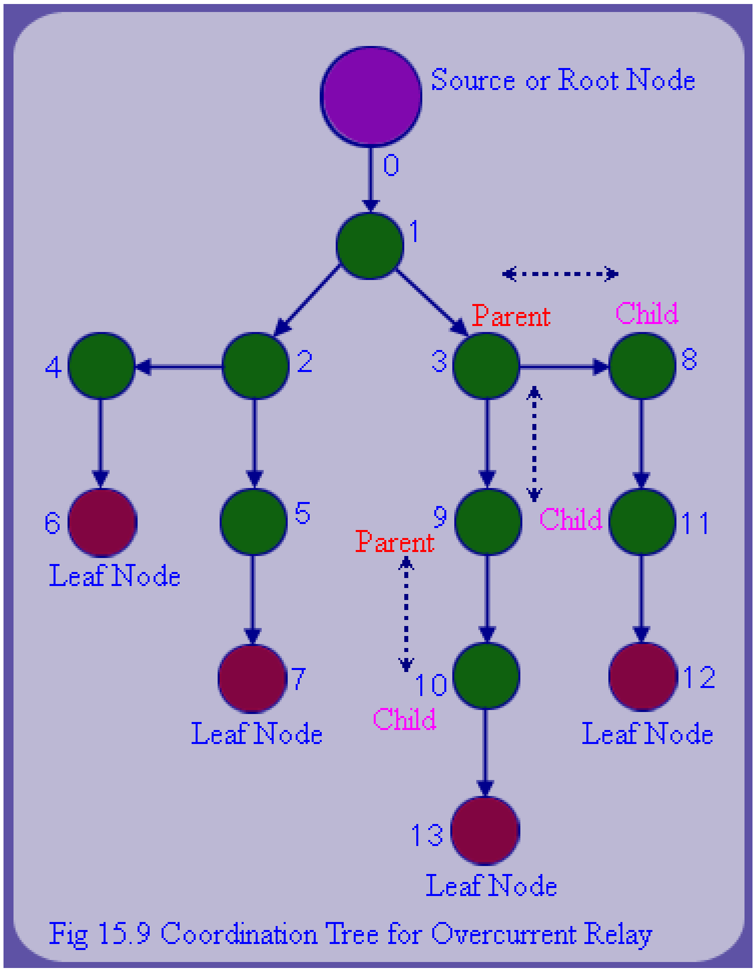

Fig 15.9 Coordination Tree for Overcurrent Relay

system is shown in fig 15.10. Except at the leaf nodes, the topology of the graph is identical to that of disribution system; the mapping from distribution system to tree is self explanatory. Each node in the tree indicates a relay. An edge exists between two nodes of the tree if, the corresponding relays have a primary backup coordination relationship. The source node is also called as the "root node". The terminal nodes except the source node are referred as leaf nodes.

In a directed tree, nodes have parent child relationship. Parent node of a node A refers to the adjacent node which supplies power to node A. In a tree, each node except source node has a unique parent. Conversely, a node fed by the parent is called a child. Root node has children but no parent. Similarly, leaf nodes have parent but they do not have any child.
Note that except at leaf nodes, a relay plays the dual role of primary and back up protection.

15.5 Identification of primary backup relay pairs

Model algorithm for identifying primary - backup relay pairs is as follows:

Intialization: Identifying, leaf nodes and root node. Set step counter k to 1. List leaf node relays as primary relays. Record the relays in row 1 of table called relative sequence matrix. Set active child nodes to leaf nodes. Set these relays in the first row of a table called relative sequence matrix.

Main Step: While there exist a parent node that is not equal to source node; do the following

(a) Find parents of the active child nodes.

(b) The corresponding relays back up the leaf node relays. Store, the relays in row k + 1 of RSM.

(c) Update active child nodes to corresponding parent nodes in step - a.

(d) Update k = k + 1.

For this particular example, there are 5 steps required in relay coordination. Identification of primary back relay pairs begins at leaf nodes. There is no constraint involved in setting the relay at leaf node, as they have no backup protection responsibility. Their sole role is to do primary protection, as quickly as possible. Therefore, these relays can be set first (step 1 in fig 15.10). The reader should step through the interactive example to obtain the feel of these steps. The relays to be coordinated at each step are summarized in Table B.

Table B : Relative Sequence Matrix

Step	**Set Relays**	**Coordinate with relays**
Step 1	R_1, R_2, R_3, R_4, R_5	NIL
Step 2	R_6, R_7, R_8, R_9, R_{10}	R_6 with R_1, R_7 with R_2, R_8 with R_4, R_9 with R_5, R_{10} with R_3
Step 3	R_{11}, R_{12}, R_{13}	R_{11} with R_8, R_{12} with R_9, R_{13} with R_6, R_7
Step 4	R_{14}, R_{15}	R_{14} with R_{10}, R_{13} and R_{15} with R_{11}, R_{12}
Step 5	R	R with R and R

	16	16 14 15

This table is also referred as Relative Sequence Matrix (RSM). The sequence for relay coordination is recorded in the above table.

15.6 Identification of primary backup relay pairs

15.7 Setting and Coordination of Overcurrent Relays in a Radial system

Once, the primary and backup relay pairs have been unidentified along the sequence of setting as in Table B, we can start determining to relay setting (PSM setting) and coordination (TMS) activity. The relay setting or co-ordination begins at the leaf node. This is because, there are no relays to be backed up. For the relays in the first row of RSM, TMS is set to the minimum value.

If the PSM or relays has not been set so far, we set the PSM. At the same time we set the PSM of the backup relays. Then, the TMS of the back-up relays is computed so that they maintain at least a time delay equal to CTI with all primary relays. Note that a relay may have to back up multiple relays. Then, we delete the leaf nodes, update the coordination tree and this process is repeated until we hit the source node. Algorithm B, describes the steps in relay coordination.

Algorithm B : Setting and Coordination of Overcurrent Relays in a Radial system	
Step 1	Initialize the coordination tree.
Step 2	Are there any leaf nodes except the root? If yes, go to step - 3, else to step - 7.
Step 3	Identify the leaf nodes in coordination tree.
Step 4	If the PSM and/or TMS of these relays have not been set so far, set them.
Step 5	Identify the parents of leaf-nodes in step - 3. Compute their PSM and TMS for backup protection and co-ordination.
Step 6	Delete the leaf nodes. Update the co-ordination tree and go back to step - 2.

Step 7	The co-ordination activity is now complete.

Review Questions

1. What are the main advantages of overcurrent relay over fuse?

2. Explain the principle of operation of an overcurrent relay.

3. Distinguish between PSM and TMS of a relay.

4. How is backup protection provided in a radial system?

5. What are the various Time Current Characteristics available for an overcurrent relay?

Recap

In this lecture we have learnt the following:

- Advantages of overcurrent relay over fuse.
- Principle of operation of an overcurrent relay.
- Primary protection and backup protection.
- Time current characteristics of a relay.
- Setting and coordination of overcurrent relay in a radial system.